safe-t PRODUCTS

SAFE-T-ALARM

SAFE-T-MANUAL

EMERGENCY STOP SAFETY DEVICE INSTALLATION, DESIGN, TESTING, SETTING INSTRUCTION AND TECHNICAL DOCUMENTATION

PLEASE VISIT OUR YOUTUBE CHANEL OR WEBSITE FOR MORE INFORMATION

YouTube

FOR MORE INFORMATION

www.safe-t-products.com.au

COMPASS ASSURANCE SERVICES ISO 9001

DON'T FORGET TO RECYCLE ME

AUSTRALIAN Designed & Manufactured

PUB. No. TD_STA V0.4

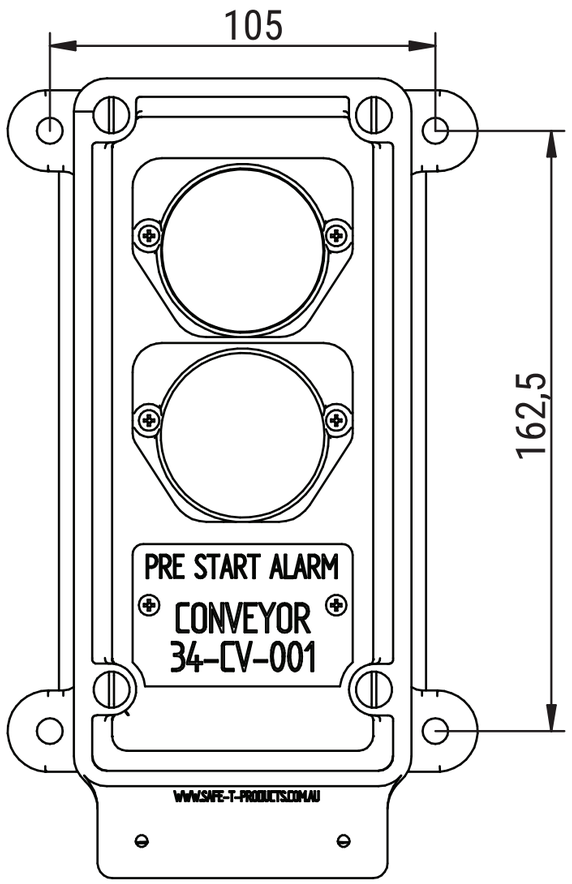
105
162,5
PRE START ALARM
CONVEYOR
34-CV-001
WWW.SAFE-T-PRODUCTS.COM.AU

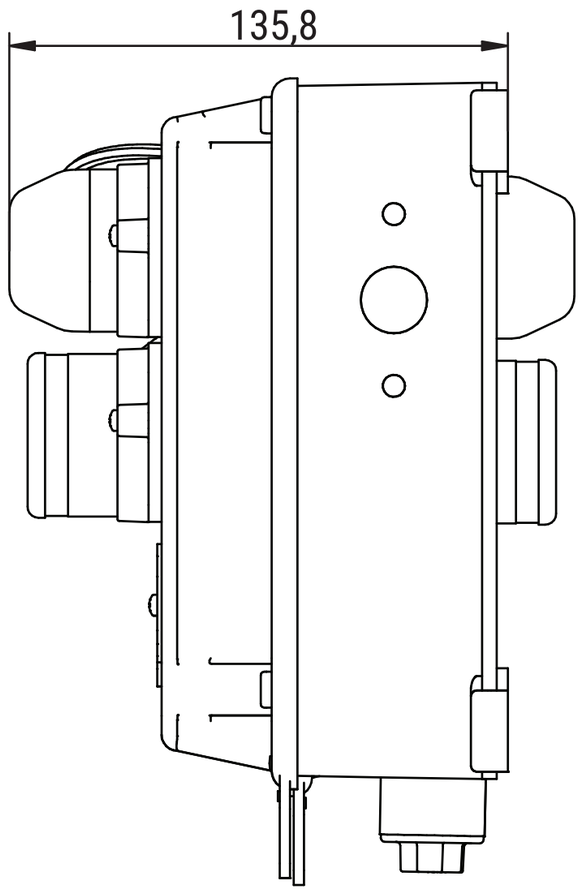
135,8

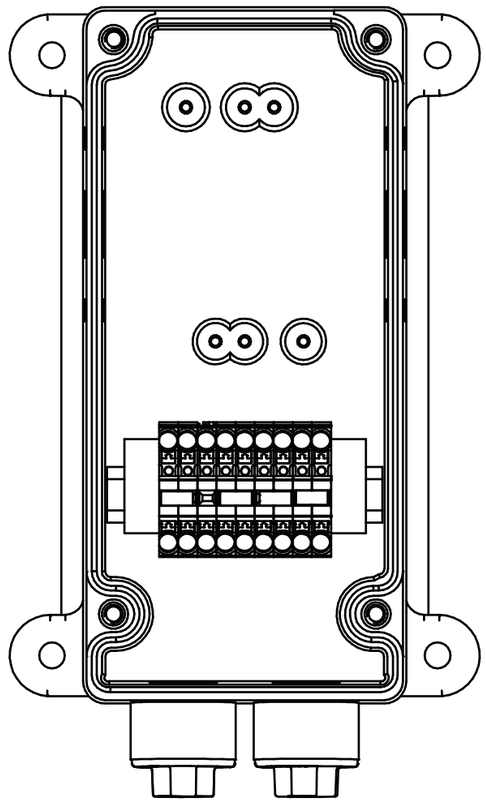

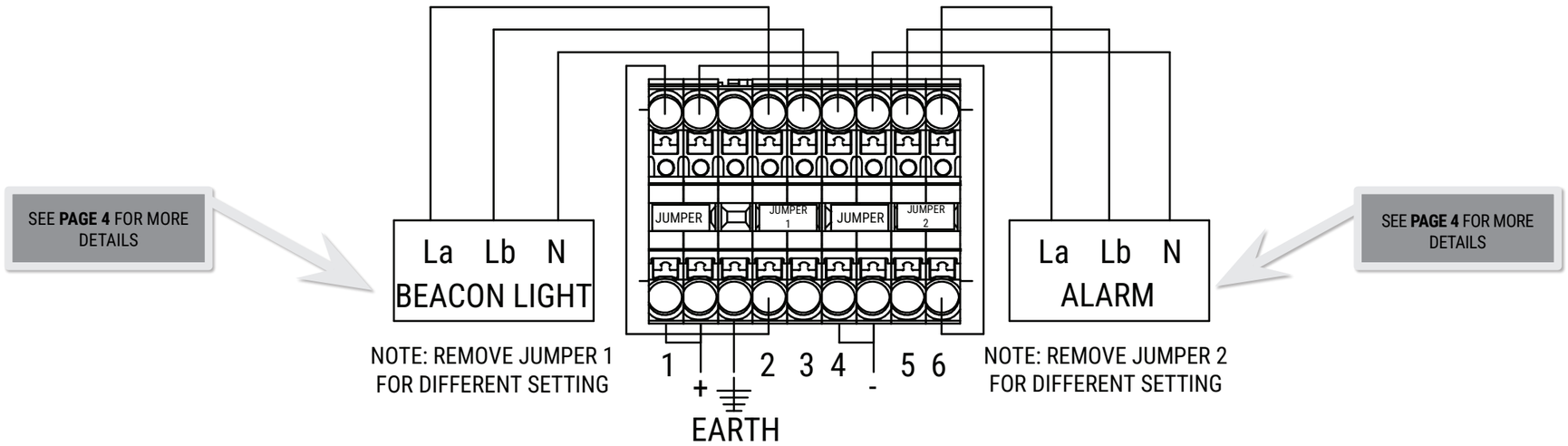
SEE PAGE 4 FOR MORE DETAILS
La Lb N
BEACON LIGHT
NOTE: REMOVE JUMPER 1
FOR DIFFERENT SETTING
JUMPER
JUMPER 1
JUMPER
JUMPER 2
1 + 2 3 4 - 5 6
EARTH
La Lb N
ALARM
NOTE: REMOVE JUMPER 2
FOR DIFFERENT SETTING
SEE PAGE 4 FOR MORE DETAILS

SAFE-T-ALARM

safe-t PRODUCTS

IBM M22 PANEL MOUNT LED STEADY/FLASHING BEACON

TECHNICAL DATA	
HOUSING	Ø 45 mm, Polycarbonate black (RAL 9005) or grey (RAL 7035)
LENS	Polycarbonate, ribbed inside orange, red, clear, blue, green or yellow
TYPE OF MOUNTING	Any
PANEL SIZE	22x1,25 mm (M22) and 30.5 mm (with adapter), mounting depth 34 mm
CONNECTION TECHNOLOGY	Screw/plug-in terminal 2,5 mm²
LEAKAGE CURRENT	0,003 A (PLC-suitable)
BEACON TYPE	LED steady beacon or LED flashing beacon
LIGHT SOURCE	9 LEDs
STROBE/FLASH FREQUENCY	2 Hz
DUTY CYCLE	100 %
SERVICE LIFE	Light source: 100.000 h
OPERATING TEMPERATURE	-25°C/+60°C
DEGREE OF PROTECTION	IP65 & UL Type 4/4x/13
WEIGHT	55 g

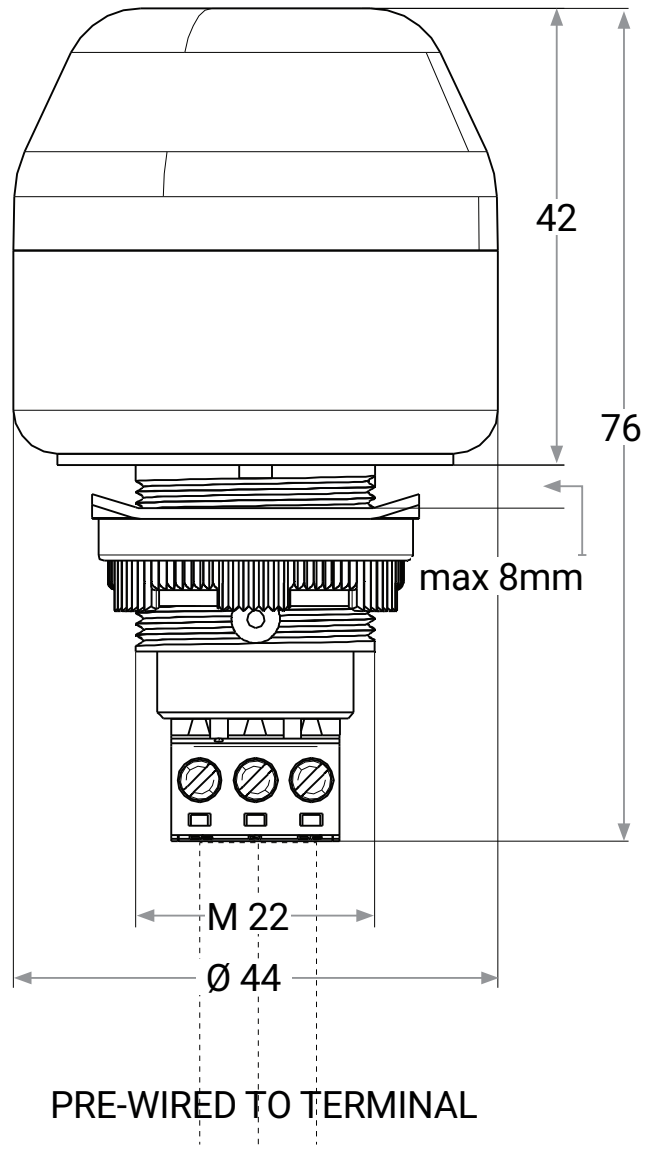

ORDER DATA

LENS COLOUR		NORMAL VOLTAGE	VOLTAGE RANGE (V)	NOMINAL CURRENT (A)
RED	S1	12 V AC/DC	+/-10%	0,062
	S2	24 V AC/DC	+/-10%	0,037
	S3	110-120 V AC	+/-10%	0,030
	S4	230-240 V AC	+/-10%	0,030
AMBER	S5	12 V AC/DC	+/-10%	0,062
	S6	24 V AC/DC	+/-10%	0,037
	S7	110-120 V AC	+/-10%	0,030
	S8	230-240 V AC	+/-10%	0,030

ESM PANEL MOUNT ALARM

TECHNICAL DATA	
HOUSING	Ø 45 mm, Polycarbonate black (RAL 9005) or grey (RAL 7035)
TYPE OF MOUNTING	Any
PANEL SIZE	22 mm (M22) and 30.5 mm (with adapter)
CONNECTION TECHNOLOGY	plug-in screw terminal bis 2,5 mm²
LEAKAGE CURRENT	0,003 A
TONE	2 Tones, 2 Tones can be switched externally, Steady tone or Pulsing tone
VOLUME	85-100 dB (can be adjusted with potentiometer)
TONE FREQUENCY	3.300 Hz
DUTY CYCLE	100 %
OPERATING TEMPERATURE	-25°C/+60°C
DEGREE OF PROTECTION	IP65 & UL Type 4/4x/13
WEIGHT	35 g

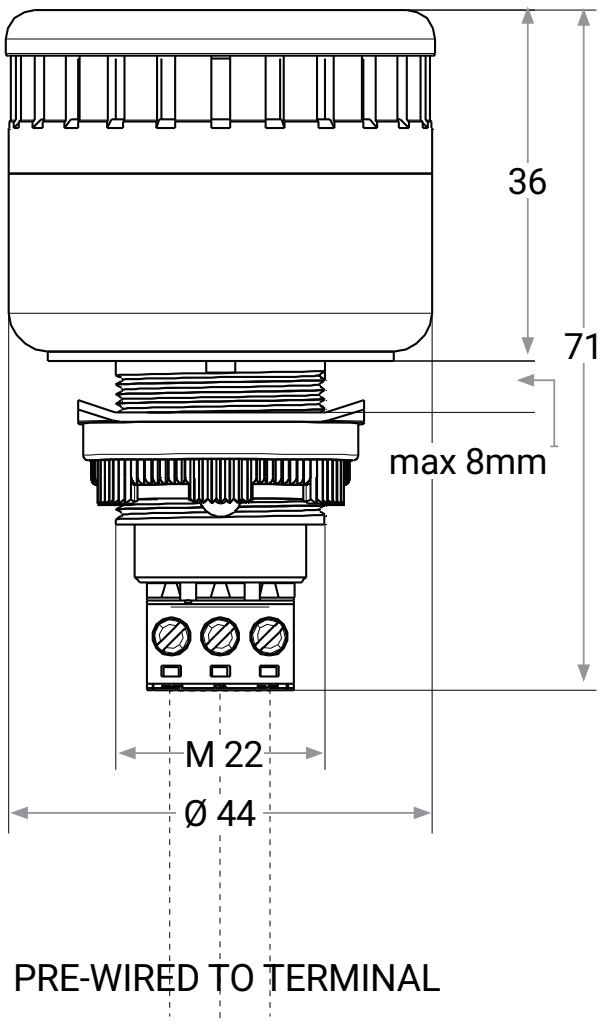

ORDER DATA

	NORMAL VOLTAGE	VOLTAGE RANGE (V)	NORMAL CURRENT (A)	MAINS FREQUENCY
A1	12-24 V AC/DC	8-24	0,019	50-60 Hz
A2	110-120 V AC	75-140	0,042	50-60 Hz
A3	230 V AC	150-260	0,040	50-60 Hz

DEVICE	MATERIAL	BEACON EXAMPLE	ALARM EXAMPLE
STA-	P-	S1-	A1

SAFE-T-ALARM

safe-t PRODUCTS

IBM M22 PANEL MOUNT LED STEADY/FLASHING BEACON

WARNING	
WARNING	Disconnect from power source to prevent electrical shock before installing or servicing. Check power supply voltage and frequency.
WARNING	Do not use strobe lights around anyone suffering from cerebral disorders (epilepsy). Strobe lights may cause seizures to occur.
WARNING	For 30mm, connect AC-Neutral to N, and AC-Line to La and/or Lb as appropriate.

-25°C TO +60°C
(-13°F TO +140°F)
Electrical Connection

IBL / IBM / IBS				
La	N	Lb		
X	X		----------	FLASHING
X	X	X	----------	STEADY

Jumper

UL TYPE 4/4 X /13 IP65
For use on a flat surface of indicated type enclosure

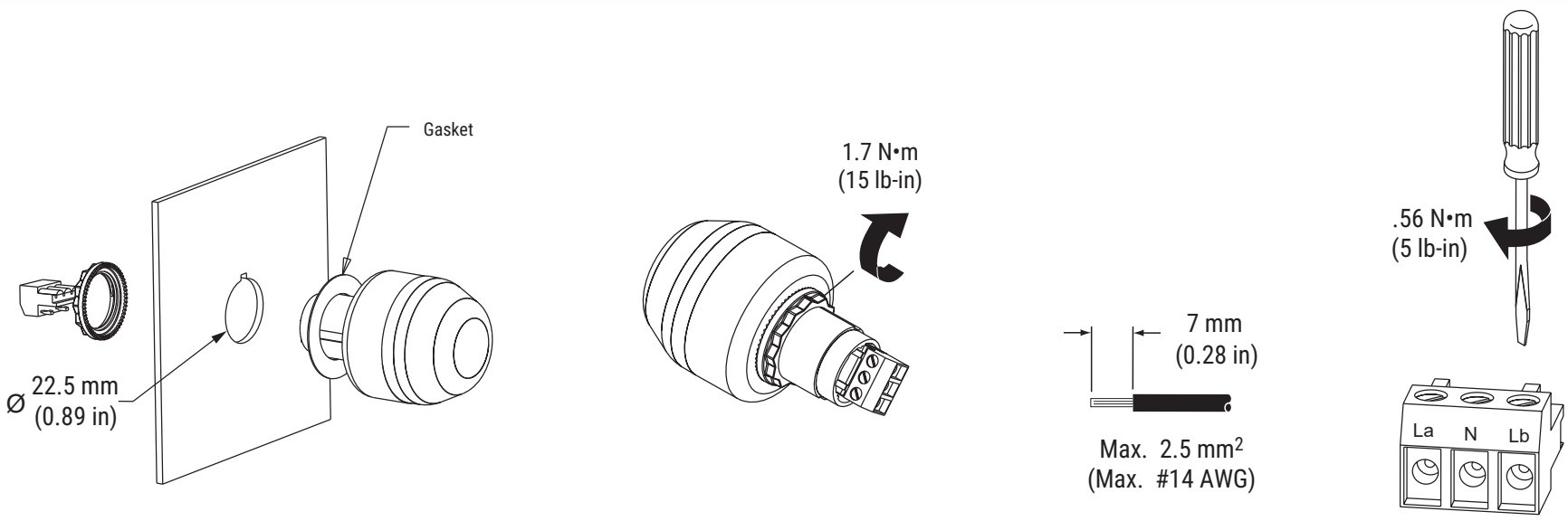

ESM PANEL MOUNT ALARM

WARNING	
WARNING	Disconnect from power source to prevent electrical shock before installing or servicing. Check power supply voltage and frequency.
WARNING	Connect AC-Neutral to N, and AC-Line to La and/or Lb as appropriate.
WARNING	For 30mm, connect AC-Neutral to N, and AC-Line to La and/or Lb as appropriate.

-25°C TO +60°C
(-13°F TO +140°F)
Electrical Connection

IBL / IBM / IBS				
La	N	Lb		
X	X		----------	FLASHING
	X	X	⊓⊔⊓⊔⊓⊔	WOBBLE (65 MM ONLY)
X	X	X	----------	STEADY

Jumper

UL TYPE 4/4 X /13 IP65
For use on a flat surface of indicated type enclosure

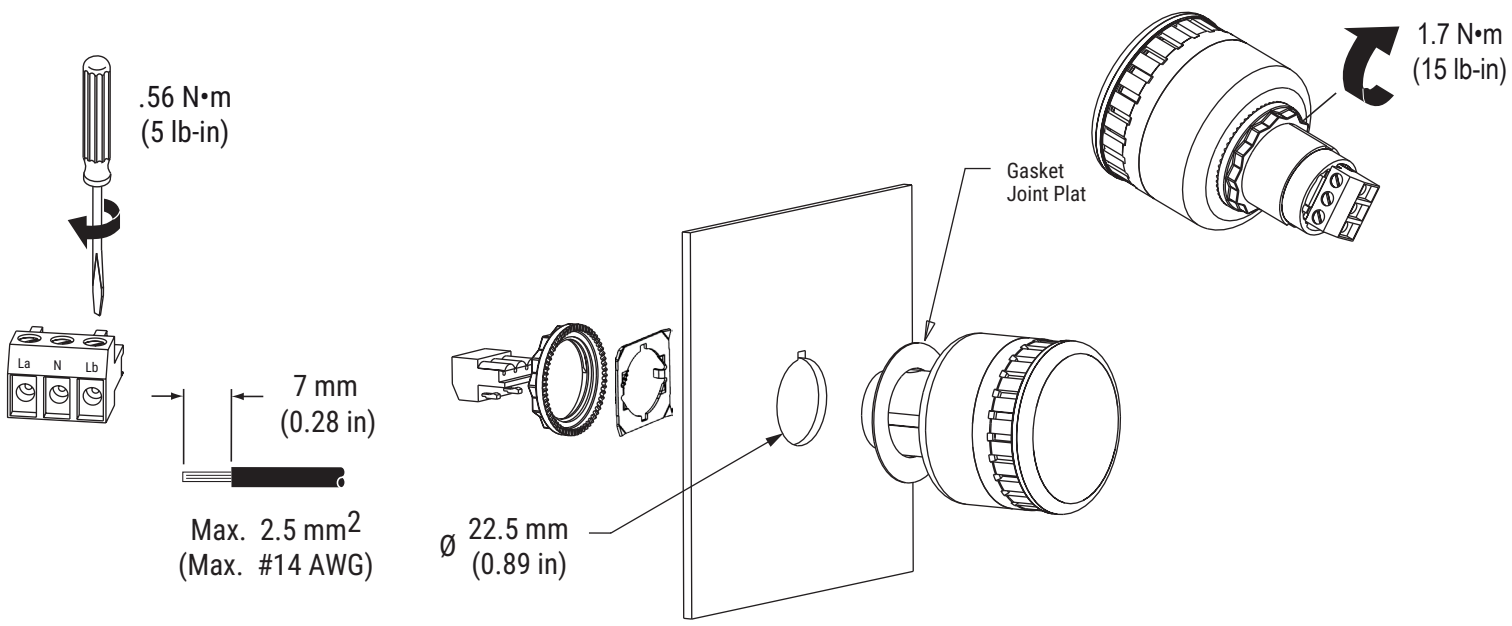
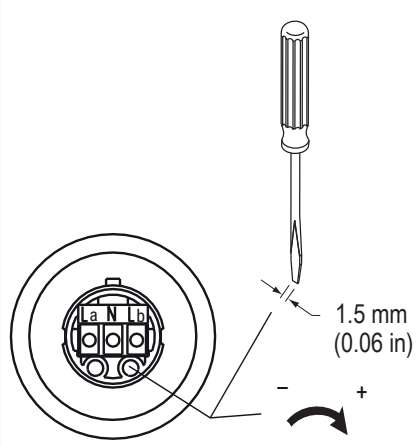
45MM / 65MM:
Volume Adjust