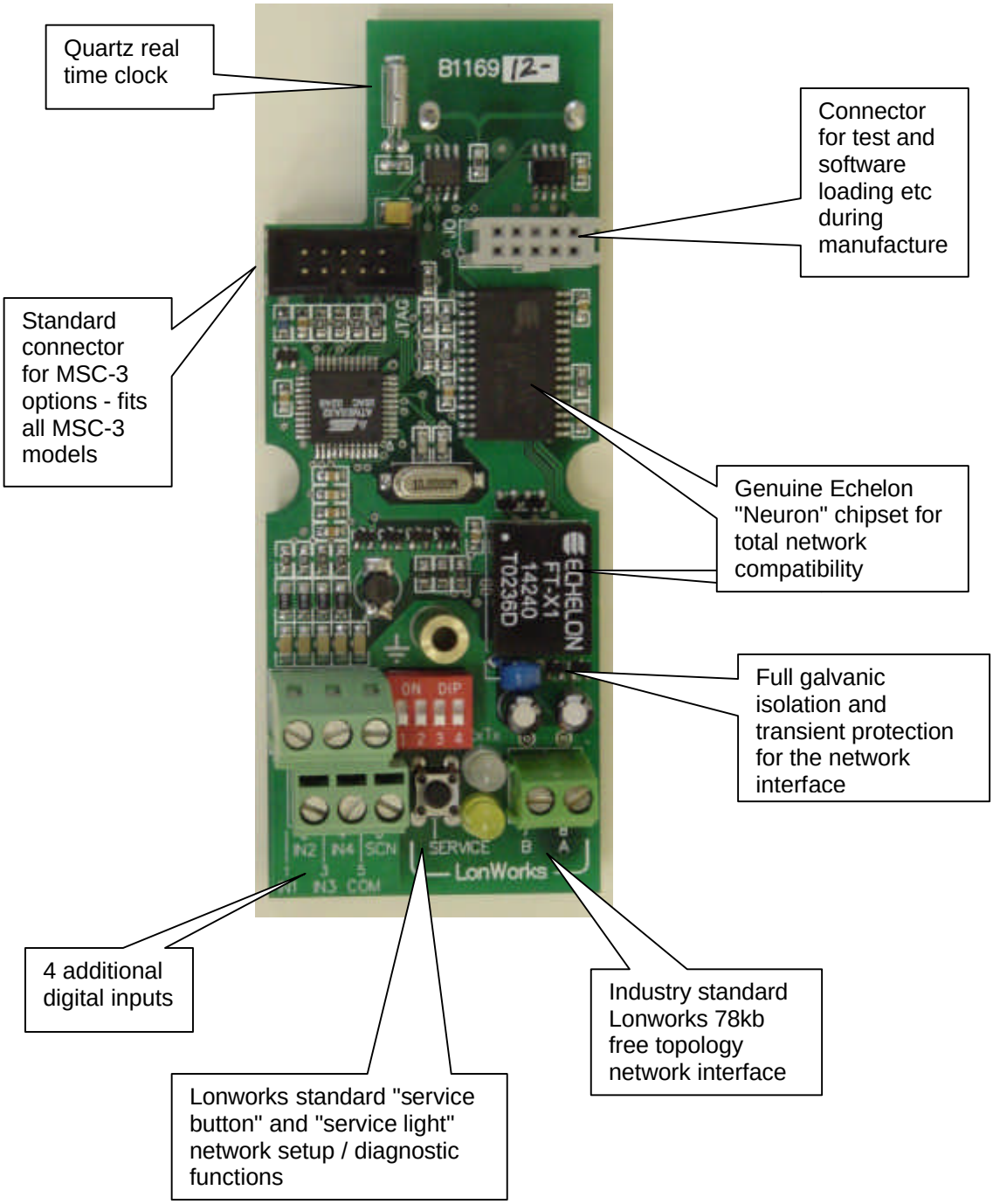

MSC-3 Lonworks option board